HOLLOW PUNCH 22 MM (COPIE)

44,35 € excl. tax
53,22 € incl. tax

Made in France

SKU: JLB22.5 | **Categories:** Hollow punches Ø21 to 30 |

DESCRIPTION DU PRODUIT

Made of high resistance steel, Boehm's JLB model hollow punches ensure a precise cut-out of pallets, washers or gaskets in soft materials: paper tape, foam, cardboard, leather, felt, cork, rubber, plastic, fabric, ...etc.

Compatibility

This hollow punch can be locked thanks to a spur system on the following chucks and handles : JLBM30, JLBM30PA, JLBM50, JLBM50PA, JLBM60, JLBM60PA and JLBM100

Other features:

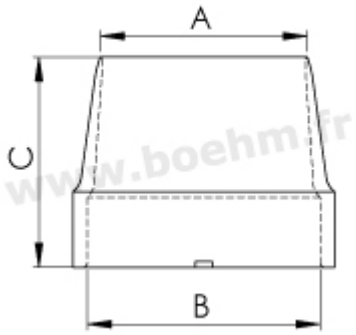

A:22 mm B:31 mm C:32 mm

Fastening method: by locking onto chuck or handle (JLB model)
Twinning possibilities: see the twinning table

For more information on how to use these tools, please consult our **our tutorials**

Made in France

INFORMATIONS COMPLÉMENTAIRES

Weight	0,04 kg
Diameter in mm	